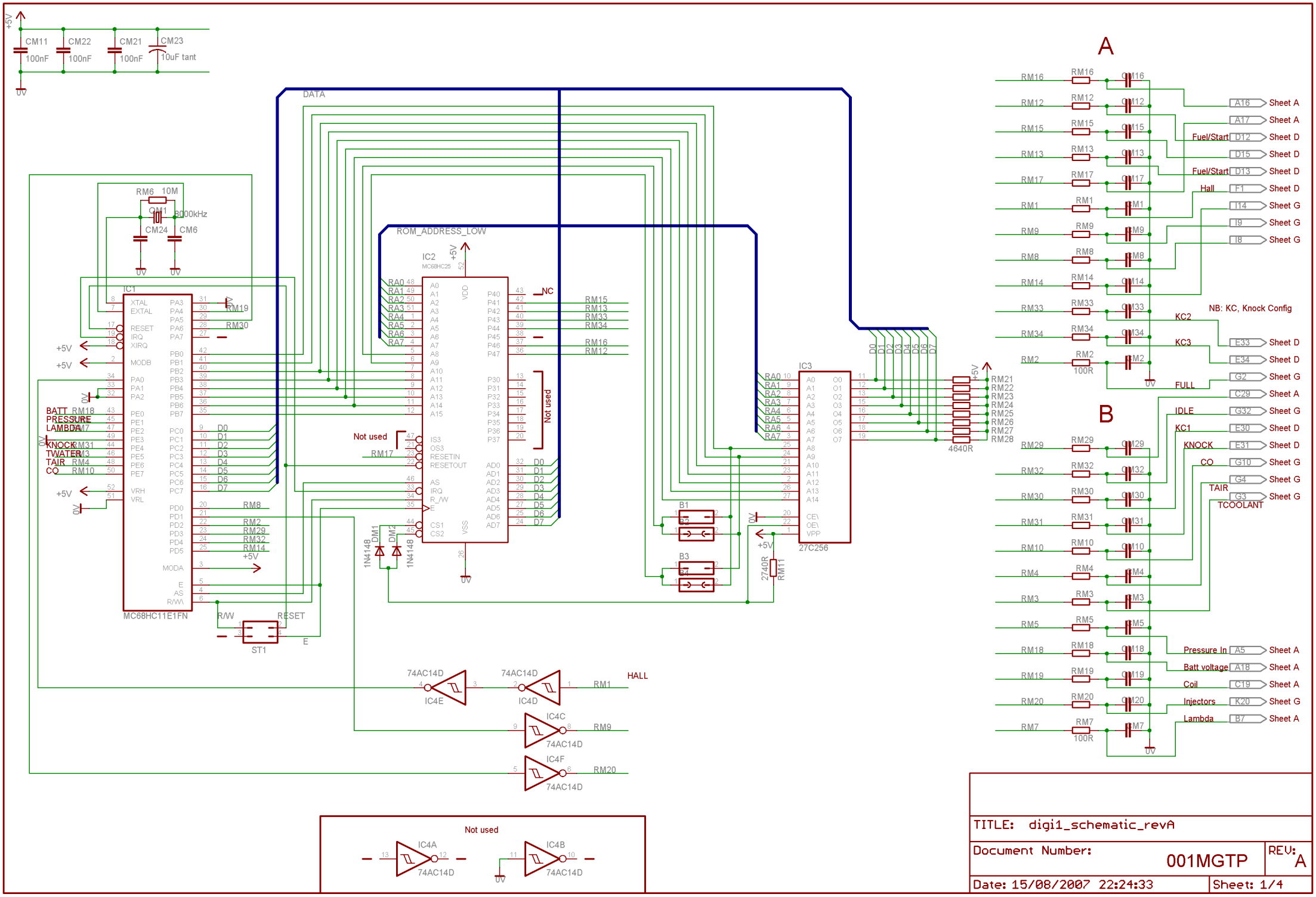
CM11 100nF
CM22 100nF
CM21 100nF
CM23 10uF tant
+5V
0V
DATA
ROM_ADDRESS_LOW
RM6 10M
CM1 8000kHz
CM24
CM6
IC1
MC68HC11E1FN
IC2
MC68HC25
IC3
27C256
4640R
RM19
RM30
BATT
PRESSURE
LAMBDA
KNOCK
TWATER
TAIR
CO
RM18
RM31
RM13
RM4
RM10
RM8
RM2
RM29
RM32
RM14
MODA
R/W
RESET
E
ST1
NC
Not used
RM15
RM13
RM33
RM34
RM16
RM12
RM17
DM1
DM2
1N4148
B1
B3
2740R
RM11
74AC14D
IC4E
IC4D
IC4C
IC4F
IC4A
IC4B
HALL
RM1
RM9
RM20
A
B
RM16
RM12
RM15
RM13
RM17
RM1
RM9
RM8
RM14
RM33
RM34
RM2
100R
RM29
RM32
RM30
RM31
RM10
RM4
RM3
RM5
RM18
RM19
RM20
RM7
Fuel/Start
Hall
NB: KC, Knock Config
KC2
KC3
FULL
IDLE
KC1
KNOCK
CO
TAIR
TCOOLANT
Pressure In
Batt voltage
Coil
Injectors
Lambda
Sheet A
Sheet D
Sheet G
A16
A17
D12
D15
D13
F1
I14
I9
I8
E33
E34
G2
C29
G32
E30
E31
G10
G4
G3
A5
A18
C19
K20
B7
TITLE: digi1_schematic_revA
Document Number: 001MGTP
REV: A
Date: 15/08/2007 22:24:33
Sheet: 1/4

A PARTS 5V supply & supervisor

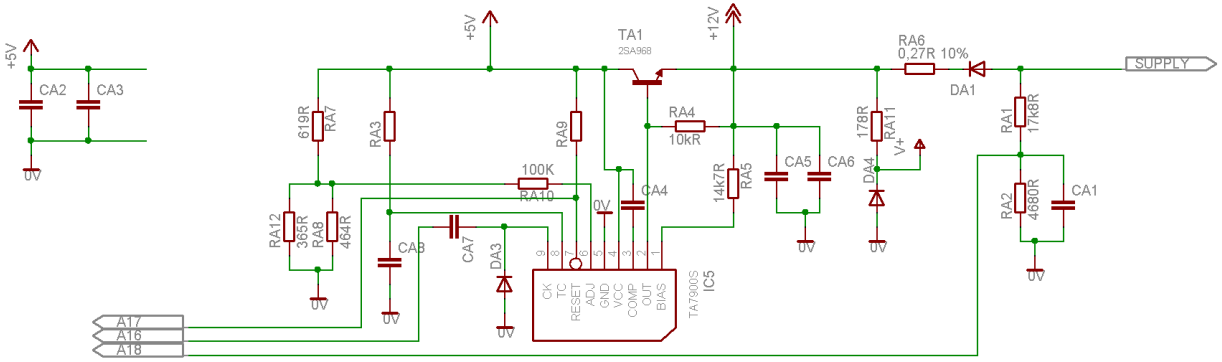

B PARTS Lambda

Not implemented

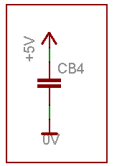

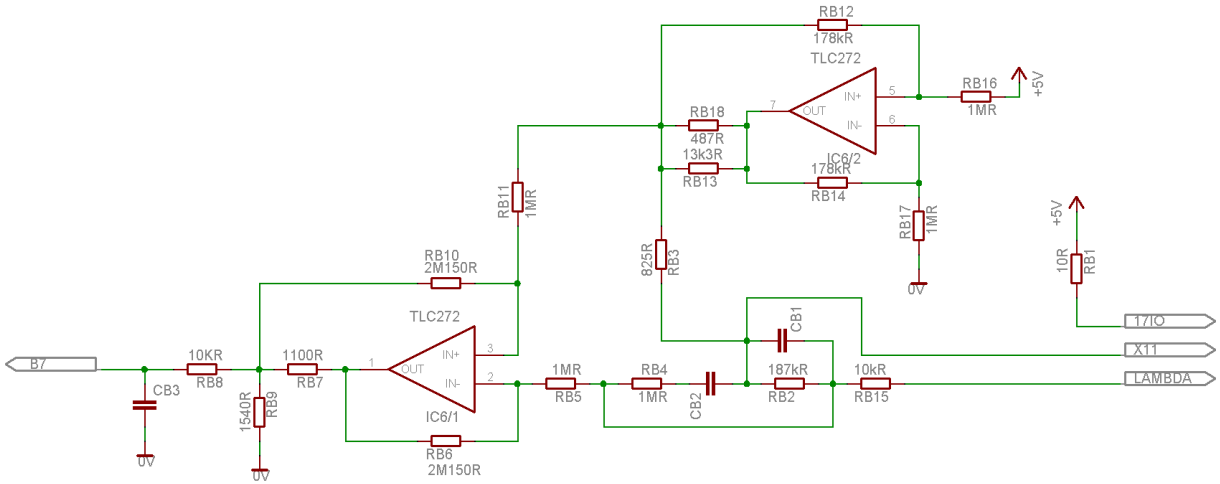

C PARTS Coil

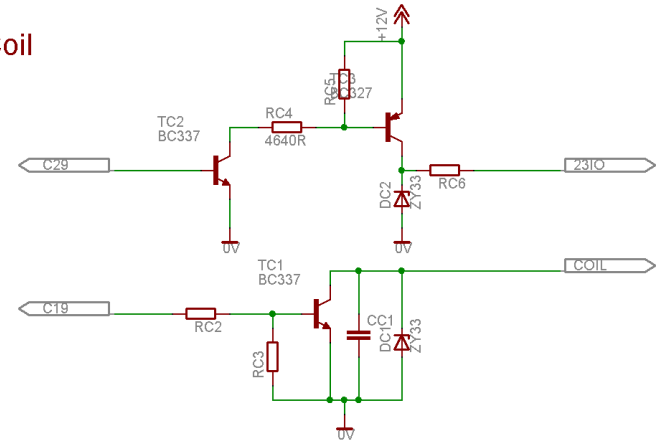

Pressure

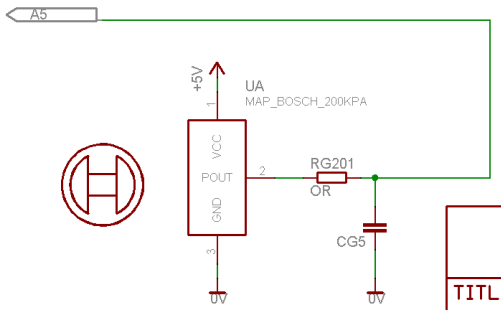

BOSCH 1 267 632 015

TITLE: digi1_schematic_revA	
Document Number: 001AGTP	REV: A
Date: 15/08/2007 22:24:33	Sheet: 2/4

D PARTS Fuel relay & start

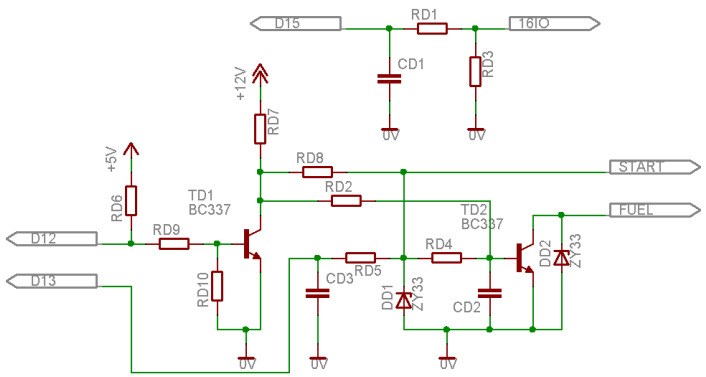

F PARTS Hall sensor

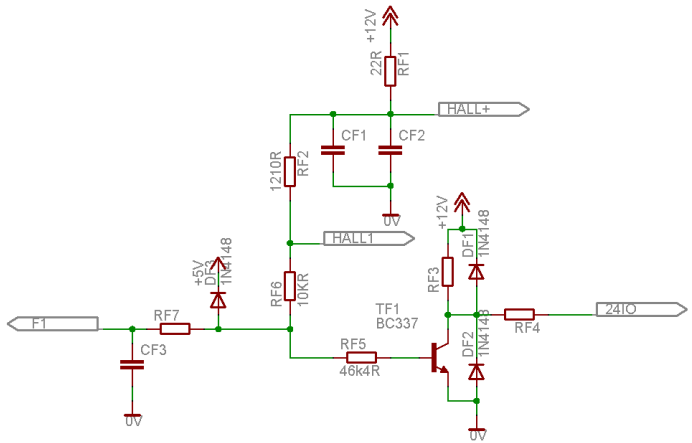

E PARTS

Important Note: IC8, IC9, IC7 are 12V supplied

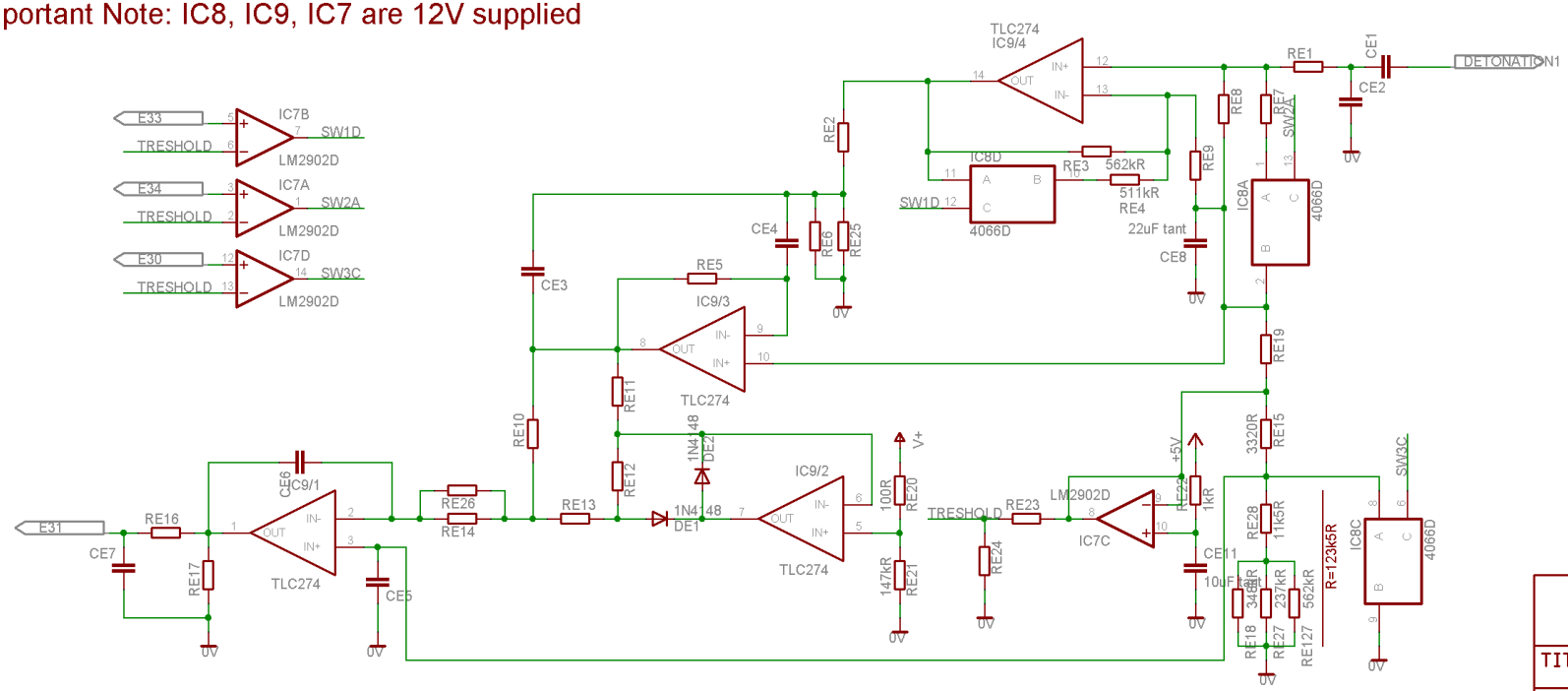

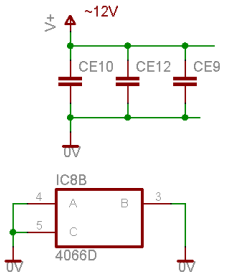

TITLE: digi1_schematic_revA	
Document Number: 001DGTP	REV: A
Date: 15/08/2007 22:24:33	Sheet: 3/4

G PARTS switchs & variable resistors

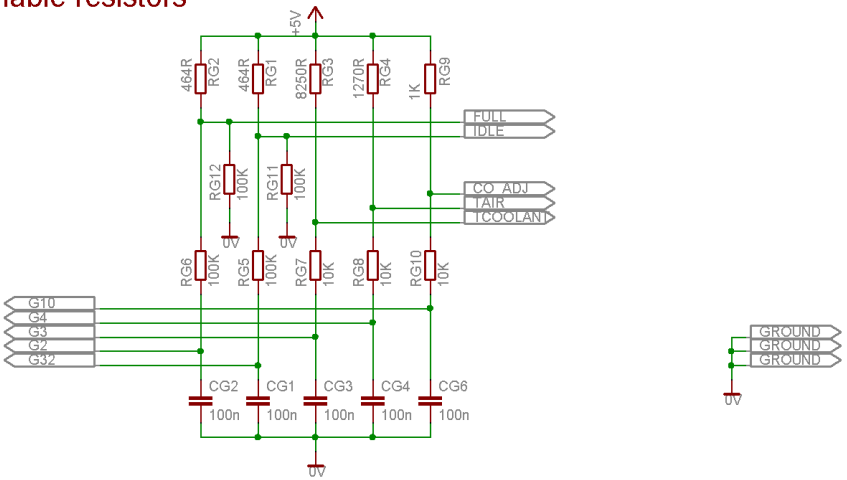

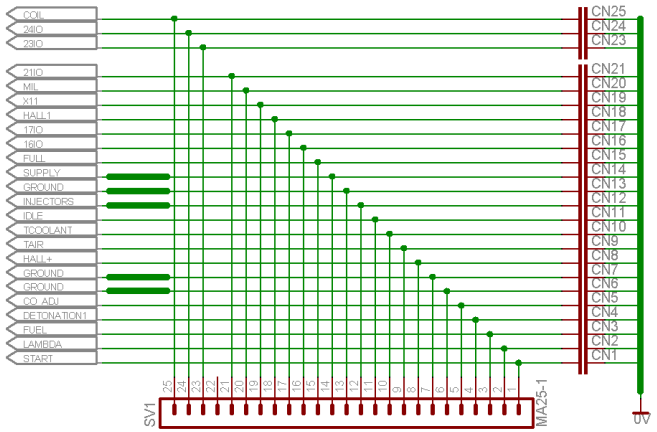

I PARTS Diagnostic?

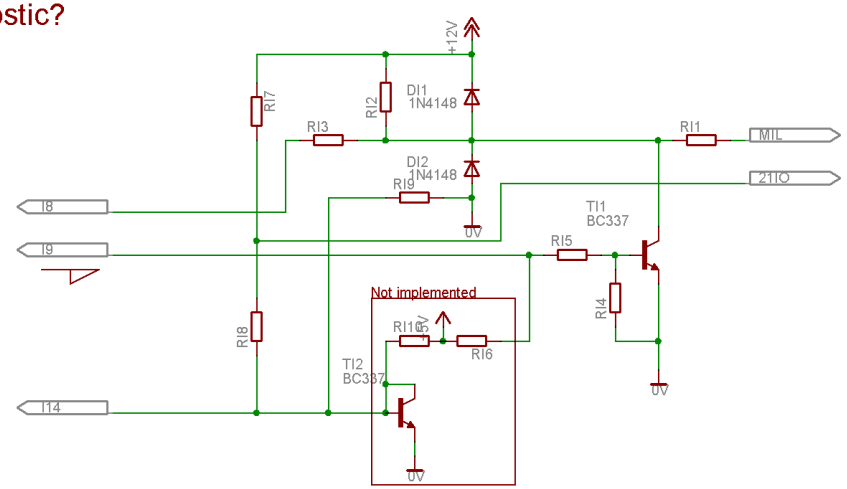

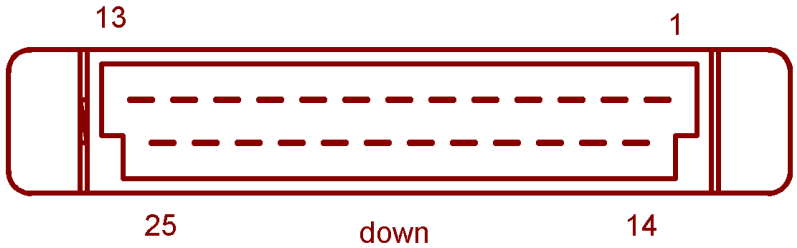

1. Start
2. Lambda
3. Fuel pump relay
4. Detonation
5. CO adjust
6°. GND (sensors)
7°. GND
8. Hall+
9. T° air
10. T° coolant
11. Switch idle
12°. Injectors
13°. GND (batt)
14. +Batt
15. Switch full
16. Not Used
17. NU
18. Hall1
19. X11
20. MIL
21. NU
22. NU
23. NU
24. NU
25. Coil

K PARTS injectors command

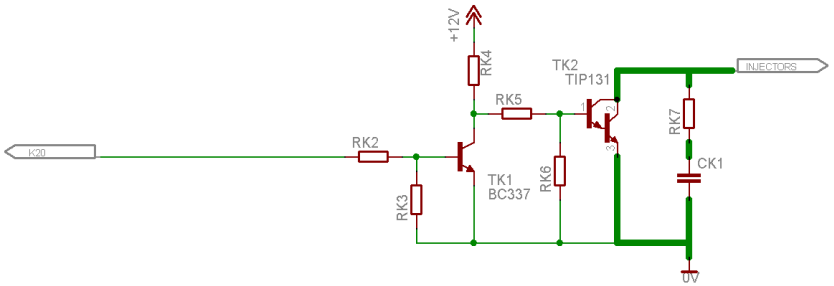

TITLE:	digi1_schematic_revA
Document Number:	001GGTP
REV:	A
Date: 15/08/2007 22:24:33	Sheet: 4/4